Spots / Spot Round 3

Cat.No. 41.E.025

Spots

Height: 2.7 cm.
F1: 10.5 cm.

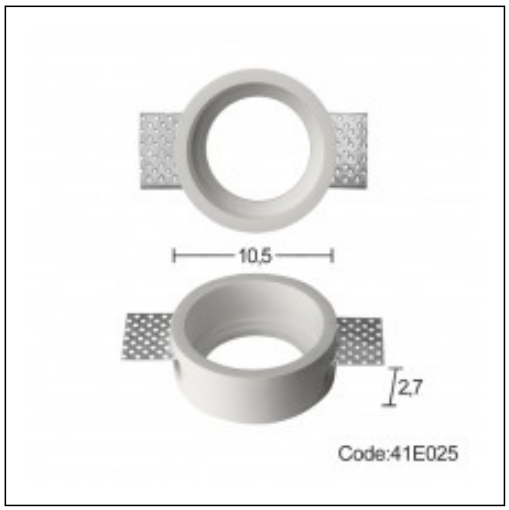

Head Quarters - Exhibition: 179 Mesogion avenue, Neo Psihiko, 115 25 Athens, tel: +30.210.6771404, fax: +30.210.6771405
www.a-grapsas.gr | contact@a-grapsas.gr