Spots / Spot Round 3

Cat.No. 41.E.025

Spots
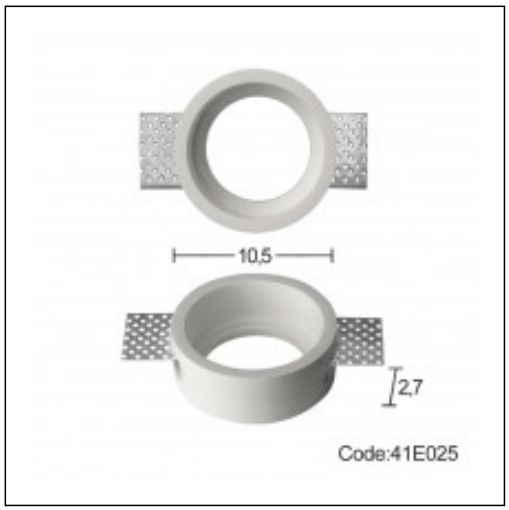
Height: 2.7 cm.
F1: 10.5 cm.